DGTEC

Model Timer

AQUA INDUSTRIAL GROUP

FILTRATION - DOSING - DETERGENT & HYGIENE - POOL EQUIPMENT

CE

DECLARATION OF CONFORMITY

Company:	**AQUA S.p.A.**
Address:	**Via T. Crotti, 1 - 42018 - San Martino in Rio (RE)**

Hereby declares that the products named:

• DGTEC

Responds to the principal features of the following European Directives:

- **2014/30/CE of 26/02/2014** - *Harmonization of the laws of the Member States relating to electromagnetic compatibility – EMC Directive*
- **2014/35/CE of 26/02/2014** - *Harmonization of the laws of the Member States relating to the making available on the market of electrical equipment designed for use within certain voltage limits – Low Voltage Directive*
- **2011/65/UE of 08/06/2011 with subsequent update 2015/863 of 31/03/2015** – *ROHS III Directives*
- **2012/19/UE of 04/07/2012** - *WEEE Directives for electrical and electronic waste*

This declaration is issued under the responsibility of Aqua S.p.A.

San Martino in Rio (RE) - 08 settembre 2020

Davide Vezzani
Certification Manager - Aqua S.p.A.

AQUA S.p.A.

CONTENTS

1.0 INTRODUCTION 4
1.1 WARNINGS 4
1.2 REFERENCE STANDARDS 4
1.3 TECHNICAL FEATURES 5
1.3.1 ELECTRICAL FEATURES 5
1.3.2 PERFORMANCE 5
2.0 INSTALLATION 5
2.1 GENERAL RULES 5
2.2 INSTALLATION KIT 5
2.3 ASSEMBLY 6
WALL MOUNTING 6
2.3.1 ASSEMBLY OF THE ACCESSORIES 6
2.4 ELECTRICAL CONNECTIONS 7
2.5 HYDRAULIC CONNECTIONS 8
3.0 PROGRAMMING 9
3.1 MAIN FEATURES 9
3.2 QUICK START-UP 11
3.3 ADVANCED PROGRAMMING 12
3.3.1 Setting the Language 12
3.3.2 Dosage Calendar Programming 12
3.3.3 Displaying and Resetting Statistics 12
3.3.4 Calibrating the Pump 13
3.3.5 Resetting Default Parameters 14
3.3.6 Settings Menu 14
4.0 ALARMS 16
4.1 MAINTENANCE ALARM 16
4.2 LEVEL ALARM (only for the model with the level probe) 16
4.3 OFF STATUS ALARM 16
5.0 MAINTENANCE 17
5.1 GENERAL RULES 17
5.2 PERIODIC MAINTENANCE 17
5.3 TROUBLESHOOTING 19
6.0 Returning material to the After-sales service 20
7.0 WARRANTY CERTIFICATE 20
ANNEX A - Overall dimensions 21
ANNEX B - Reference Figures 22
ANNEX C - Exploded views 23
ANNEX D - Chemical Compatibility Table 25
ANNEX E - Default Parameters 27
ANNEX F- Acronyms Table 28
ANNEX G - Menu Layouts 29

Programmable digital peristaltic pump ENGLISH

1.0 INTRODUCTION

The range of "***DgTec***" programmable digital peristaltic pumps is designed to manage dishwashers and/or washing machines and consists of the following models:

- *ST Model: single solenoid valve programmable digital pump*
- *2ST Model: double solenoid valve programmable digital pump*
- *CD Model: adjustable digital pump with conductivity reading*
- *OPL Model: programmable digital pump for washing machine*
- *Timer Model: for weekly or daily programmable timed dosage*

The Timer model allows you to measure out the products for enzymes and bacteria disinfection easily and in a flexible and precise way enabling you to programme up to 8 dosages per day, setting time and length.

1.1 WARNINGS

Before starting assembly, carefully read these instructions and follow them during installation.

If the instructions provided in this manual are not followed or carried out correctly, this may result in personal injury or damage to the device and/or systems.

We recommend reading the label reported on the pump and following the directions below:

- ✓ ***The pressure of the injection point must be lower or equal to the pump rated value!***
- ✓ ***When you receive the product, check the integrity of the pump and all of its parts. Should there be any anomalies, promptly notify qualified personnel before performing any operations.***
- ✓ ***Keep this manual carefully for future reference.***
- ✓ ***Before installing the pump make sure that the details provided on the adhesive plate attached to the pump correspond to those of the electrical system.***
- ✓ ***Do not handle the equipment with wet hands or feet!***
- ✓ ***Do not leave the equipment exposed to the elements!***
- ✓ ***Make sure the peristaltic tube is compatible with the liquid to be dosed!***
- ✓ ***The equipment must be handled by qualified personnel!***
- ✓ ***If any irregularities are experienced during pump operation, cut off the power supply and contact one of our customer care centres for any repairs!***
- ✓ ***In order for the pump to operate correctly it is necessary to use original spare parts or accessories. The manufacturer is relieved of any responsibility in the case of any breakdowns due to tampering or use of non-conforming parts and accessories***
- ✓ ***The electrical system must comply with regulations in force in the country where the system is installed.***
- ✓ ***The operating ambient temperature must not exceed 40°C with a relative humidity of 90% at 90°C.***

1.2 REFERENCE STANDARDS

Our pumps are manufactured according to General Standards in force and in compliance with the following European Directives:

- n° **2004/108/CE** " e s.m.i.
- n° **2006/95/CE** "DBT Low Voltage Directive" e s.m.i.
- n° **2011/65/UE** , **2012/19/UE** "direttive RoHs e WEEE" e s.m.i.

1.3 TECHNICAL FEATURES

1.3.1 ELECTRICAL FEATURES

For the power supply value we recommend reading the label on the pump!

1.3.2 PERFORMANCE

- Maximum height of the suction tube: 1.5 m
- Flow rate and backpressure: refer to the table below and read the label on the pump to identify the corresponding model.

Codes	Power supply	Motor Type	Flow rate (l/h)	Backpressure (bar)	Peristaltic Tube
ADD81V4010000000	230 VAC	230 VAC	1.4	1	Santoprene
ADD8003010000000	230 VAC	230 VAC	3	1	Santoprene

- Operating ambient temperature: 0 ÷ 45°C
- Transport and Packaging Temperature: -10 ÷ 50 °C
- Protection degree: IP65

2.0 INSTALLATION

2.1 GENERAL RULES

Pump installation must be carried out as follows:

- In vertical position with a tolerance not greater than +/-15°.
- Away from sources of heat in dry locations, at a maximum temperature of 40°C and a minimum of 0°C.
- In a ventilated environment and easily accessible to an operator for periodic maintenance.
- Above the level of the liquid that needs to be dosed, at a maximum height of 1.5 metres.
- Do not install the pump above the tank when using liquids that emit fumes, unless it is sealed shut.

2.2 INSTALLATION KIT

The pump is supplied with all items required for correct installation. The full kit supplied is reported in Figure 1 (*PERISTALTIC DUTRAL DET KIT - code ADSP6000042N*) and is composed by:

a) Fixing bracket *(code* ADSP8000025);
b) Wall plugs and screws (*code ADSP6000041);*
c) 90° PP Complete cleaning injection fitting 4X6 D10 *(code ADSP6000068N);*
d) Counterweight of the foot strainer (cylinder) (*code DA3040);*
e) Short PP foot strainer without valve *(code ADSP6000075);*
f) Crystal PVC ø 4x6 suction and delivery tubes *(code ADSP6000546);*

The pump can be connected to a level probe that is not supplied as standard:

g) Level probe with BNC *(code ADSLG4);*

Fig. 1- Installation kit

2.3 ASSEMBLY

We always recommend wearing protective masks, gloves, goggles and any other PPE during all installation steps and when handling chemical products.

WALL MOUNTING

Proceed as follows to secure the pump to the wall:

- Fix the bracket to the wall using the wall plugs and screws supplied.
- Place the pump on the bracket.
- Ensure the fixing is stable.

It is also recommended to install the pump in a dry environment, away from heat sources and exhaust vapours.

2.3.1 ASSEMBLY OF THE ACCESSORIES

Read the instructions in the Figures 2/a and 2/b before assembling.

Foot strainer Tank inlet fitting

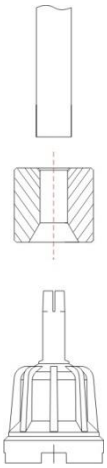

(a)

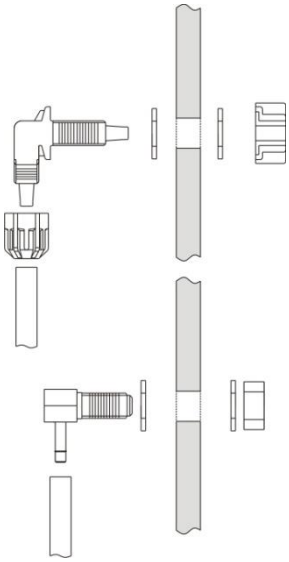

(b)

2.4 ELECTRICAL CONNECTIONS

Before performing any intervention on the pump, disconnect the power supply voltage of the machine!

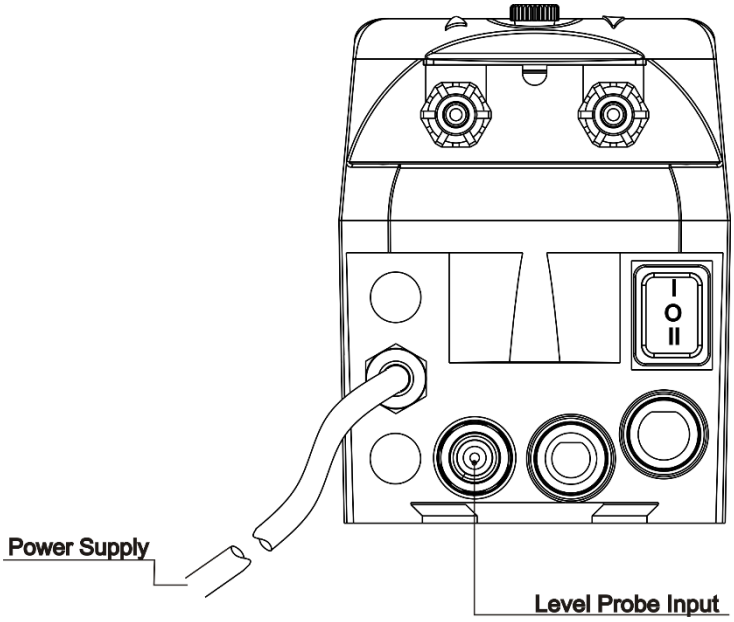

Fig. 3- View from below

Connect the pump cable to a voltage that is compatible with the one on the label.
For the connections refer to Fig. 3.

CAUTION !!!!!

Verify that the earth system is perfectly functional and complies with the applicable regulations. Make sure that the highly sensitive differential switch is present (0.03 A). Verify that the rated values of the pump are compatible with those of the mains. Never install the pump directly in parallel with inductive loads (e.g. motors/solenoid valves). If necessary, use an isolating relay. There are two protection devices inside the pump: a varistor and a fuse.

2.5 HYDRAULIC CONNECTIONS

- Make sure the suction tube is placed in the product container and then connected to the pump suction fitting (marked with the ▲ symbol on the cover) and tightened with the correct ring nut.
- Make sure the delivery tube is inserted in the pump delivery fitting (marked with the ▼ symbol on the cover) and tightened with the correct ring nut. It must then be connected to the inlet fitting of the tank provided with the installation kit.

Make a 10 mm hole and insert the infeed fitting of the tank.
Refer to Fig. 4.

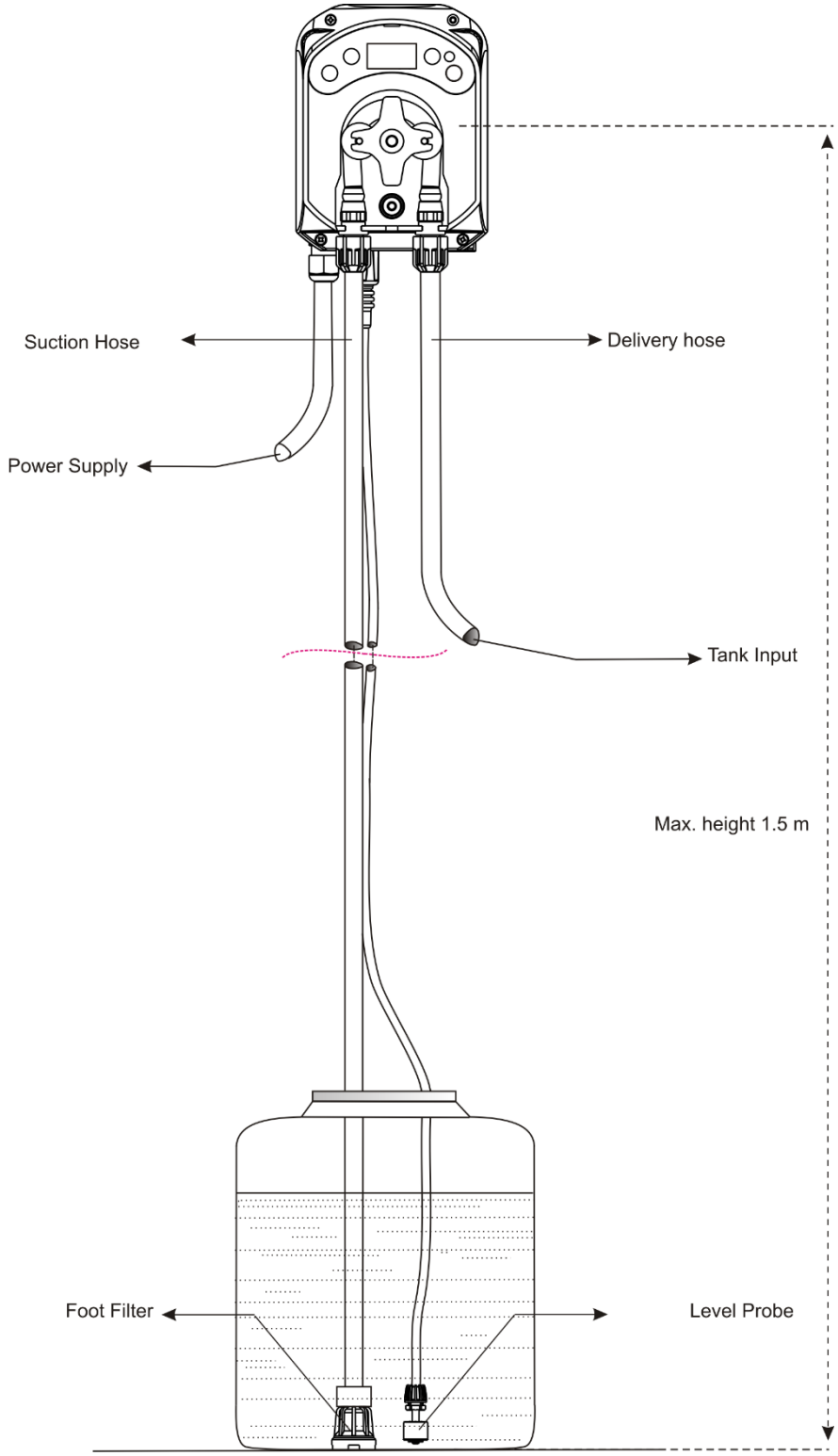

Fig. 4 Installation

3.0 PROGRAMMING

3.1 MAIN FEATURES

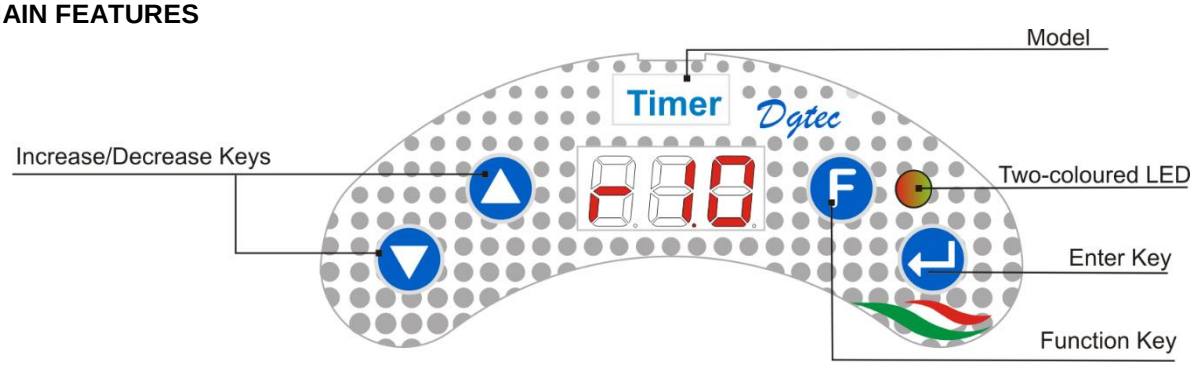

FIG. 5 - USER INTERFACE

The Increase/Decrease keys allow to change the numerical values and scroll through the lists of options for all the available menu entries.

The Enter key allows to access and exit from the various entries of the submenus. Pressing the key for 3 seconds allows, from the Initial Menu, to access the Programming Menu and to go back to the Menu one level up from the main entries on a Menu;

The Function key allows to browse through the Menu entries.
By pressing the key for 3 seconds from the initial page, you can access the User Menu;

TWO-COLOURED LED

The two-coloured LED displays the following conditions:

- **Steady green**: the pump is active;
- **Flashing green:** the pump is dosing;
- **Steady red**: the pump is not active;
- **Flashing red**: there is an alarm;
- **Steady Orange**: if you are browsing the Programming Menu;
- **Flashing orange:** Pump priming in progress;

The switch has three positions:

— : the pump is active (ON)

O : the pump is off (OFF)

= : the pump is priming (MOM)

The MOM position is monostable, therefore after setting the switch to MOM, when it is released the switch automatically goes back to OFF.
The pump doses for 60 seconds at the maximum speed; if the MOM key is pressed again before the 60 seconds elapse, the priming is interrupted.

OPERATION

The Timer model pump measures out chemical products for swimming pool water disinfection according to a daily or weekly time planning.
The dosage will be carried out every day at the time planned, for the length scheduled (from 1 minute to 60 minutes) at full speed (100% of the actual pump flow rate).
It is possible to programme a maximum of 8 product dosages every day. It is also possible to diversify the planning every day or to set the same dosage scheme every day.

.

MENU

When the pump is turned on, regardless of the status of the switch, for a second the display shows the firmware version with the following format "***rx.y***". It then displays the first entry of the Initial Menu.
You can browse the whole Menu both when the switch is ON and when it is OFF.

The Menu consists of the following submenus:

- **Initial Menu**, which allows to display the status of the pump;
- **User Menu**, which allows to change the main operating parameters;
- **Programming Menu**, which allows to set all of the operating parameters and to display the statistics: this menu can be accessed only by entering a password;

To browse through the Menus refer to ANNEX G - *Menu Map.*

Initial Menu

The first entry of the Initial menu displays one of the following pages, depending on the status of the switch and the pump:

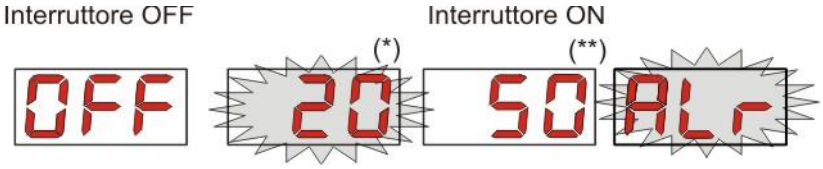

(*) example value corresponding to the time: hours and minutes visible in turns;
(**) example value corresponding to the dosage time countdown;

Time: when the dosage and the inhibiting signal are off the hours and the minutes are visible in turns;

Dosage Countdown: when the dosage is in progress the remaining time is displayed and expressed in minutes and the last minute is expressed in seconds.

Alr (Alarm entry): if there are one or several active alarms, with the switch set to ON, every page of the Initial Menu will be alternated to the entry that reports the signal with the top priority. *(see Alarm section)*

From the home page, with the **F** key, it is possible to display the current day of the week "**dAy**";

From the current day of the week, with the **F** key it is possible to go back to the first entry: if the display shows the dosage countdown, this is preceded by the Dosage State tag "**d.St**", but, if the display shows the current time, it will be preceded by the tag "**tIn**".

From any entry of the Initial Menu you can go to the:

- **Programming Menu** by pressing **Enter** for 3 seconds;
- **User Menu** by pressing the **F** key for 3 seconds;

User Menu

The User Menu allows to set the main pump dosing parameters.

You can browse through the User Menu with the **F** key and display:

- **Prl**: allows to prime the pump without using the switch. You can start or stop the priming with the **Enter** key. The display shows a flashing "**Prl**" and the pump starts running at top speed.
- **do.C:** it allows to programme the weekly dosage calendar; it is possible to display the days of the week by pressing the **Enter** key for 3 seconds (***Sun/Mon/Tue/Wed/Thur/Fri/Sat***), or **ALL** in case of daily planning and it will possible to programme and display all 8 dosages, their time ad length (see *Quick Start-up*):
  - **H.d.1-d.8**: in order to select/display the corresponding dosage starting hour d.1- d.8;
  - **n.d.1-d.8**: in order to select/display the corresponding dosage starting minutes d.1- d.8;
  - **t.d.1-d.8**: in order to select/display the corresponding dosage length in minutes d.1- d.8;

Weekly or daily dosage programming calendar parameters can be changed only after being enabled using the Settings Menu, i.e., if the **OnL** (online modification) is enabled: failing that they can only be displayed.

From the User Menu you can go back to the Initial Menu by pressing the **F** key for 3 seconds.

Programming Menu

The Programming Menu allows to set all of the pump operating parameters and can be accessed only by entering the password.

The Programming Menu can be accessed only using the Initial Menu: after pressing **Enter** for 3 seconds, the display shows "***PAS***", the LED turns orange and is steady. Then press **Enter** again and on the password selection menu the first digit of "*000*" starts flashing. With the ▲ and ▼ keys you can increase/decrease the value displayed, with **Enter** you can scroll and select the desired digit. After setting the correct password, press **Enter** again for 3 seconds.

From every menu you will go back to the first entry of the Initial Menu if no operation is carried out for more than 2 minutes.

3.2 QUICK START-UP

This section features the steps to carry out to use the pump straight away. For further details on operation, refer to section 3.3 "Advanced Programming".

For pump correct operation, simply set the dosage calendar, which can be accessed from the User Menu.

From the User Menu you can proceed quickly with the steps below:

- Prime the pump;
- Set weekly and daily dosages;

Here below are the pump default parameters:

- On-line Change of User Menu values enabled;
- Inactive dosages;

USER MENU

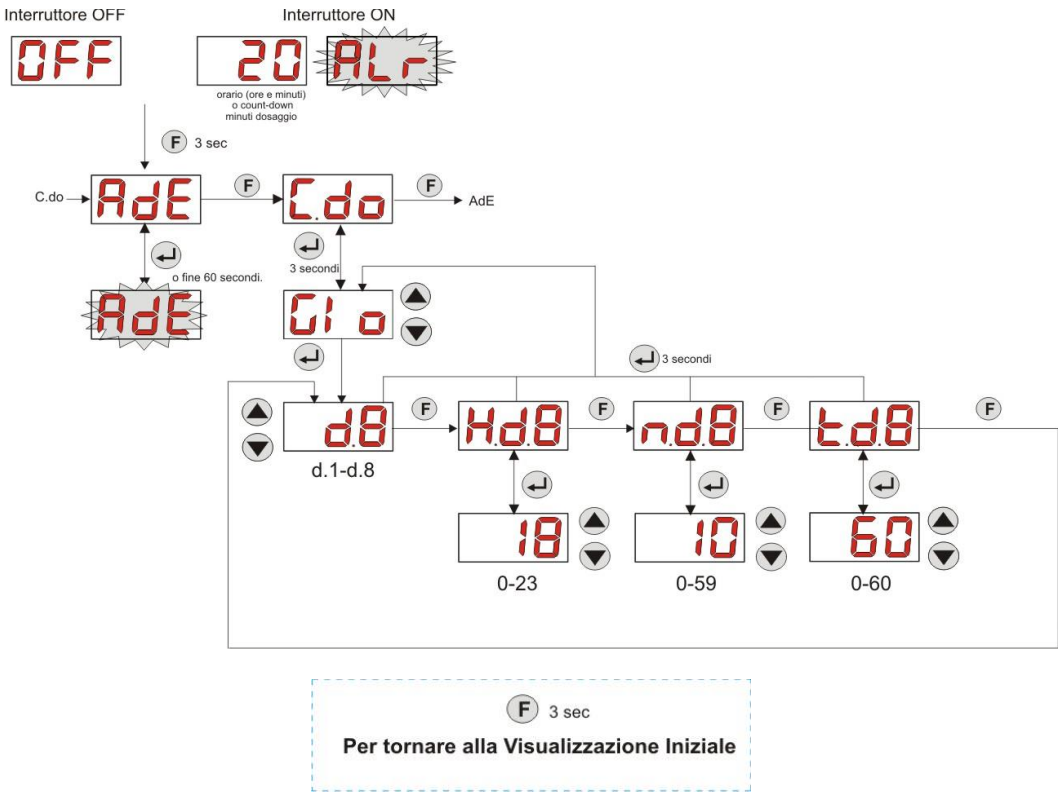

Fig. 7 - Standard programming from User Menu

Dosage length and time can be modified only if the modification entry On Line in the Settings Menu has been enabled.

3.3 ADVANCED PROGRAMMING

Here below are the various features of the **Programming Menu** in greater detail.

Every parameter that is changed in the pump programming is saved when you go back to the initial display. If the pump power supply is disconnected before going to the stand-by display, programmed data is lost.

3.3.1 Setting the Language

From the **LAn** entry you can choose between Italian **It** and English **En** via the ▲ ▼ keys. Use **Enter** to enter and exit. (Fig. 8)

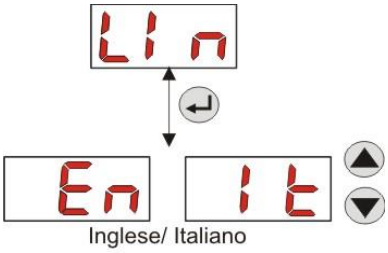

Fig. 8 - Setting the Language

3.3.2 Dosage Calendar Programming

From the **do.C** entry it is possible to access the following submenu: (Fig. 9)

- ***Sun/Mon/Tue/Wed/Thu/Fri/Sat*/ALL**: it allows you to select the days of the week using the ▲ and ▼ keys and if necessary it allows you to set a daily programming using the "**ALL**" entry;
- **H.d.1-d.8:** it allows you to display or set the corresponding dosage starting time d.1- d.8 using the ▲ and ▼ keys (range 0-23 h);
- **n.d.1-d.8:** it allows you to display or set the corresponding dosage starting minutes d.1- d.8 using the ▲ and ▼ keys (range 0-59');
- **t.d.1-d.8:** it allows you to display or set the corresponding dosage length d.1- d.8 expressed in minutes using the ▲ and ▼ keys (range 0-60');

To go back to the main **do.C** entry of the Programming Menu, press **Enter** for 3 seconds.

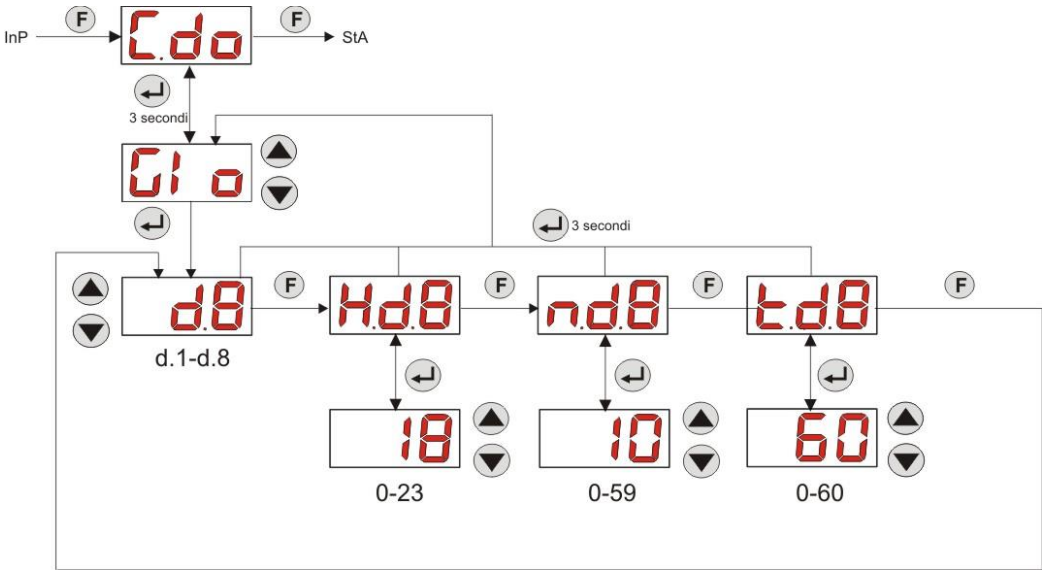

Fig. 9- Dosage time and length setting - Programming

3.3.3 Displaying and Resetting Statistics

From the **StA** entry on the Programming Menu you can access the Pump statistics submenu (see Fig. 10).
Here below is the parameter saved during the pump operation:

- The pump's overall operating time **P.d.t**, from 0 to 999 hours, with the following format:
  - **h.mm** up to 9 h and 59 m
  - **hh.m** up to 99 h and 59 m (minutes expressed in tens)
  - **hhh** up to 999 h

To reset each of the above-mentioned fields, just access from the numerical value the **rSt** reset entry with the F key and from there select **YES**, confirming with **Enter**. You will go back to the **t.F.P.** entry.

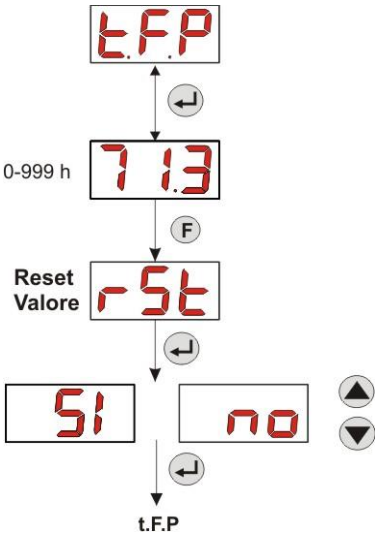

Fig. 10 - Statistics Menu

To go back to the Programming Menu press **Enter** for 3 seconds.

3.3.4 Calibrating the Pump

The calibration of the pump allows to achieve more accurate dosing, as it allows to correct the dosing time in relation to the actual flow rate of the pump. If the calibration is not carried out, theoretical dosing times are calculated based on the pump rated flow rate value (*read the value on the label*), and could be different from the real ones.
The rated flow rate and the actual flow rate could differ for a number of reasons related to the use of the device (wear of the peristaltic tube, etc.).

From the **P.CA** entry, you will be able to calibrate the pump for a fixed time of 60 seconds, thereby measuring the amount of liquid dosed via a graduated container used as a reference: from the start label "**Str**", launch the count by pressing **Enter** and the pump will start dosing at top speed. Finally, just set the amount in ml (from 0 to 300).

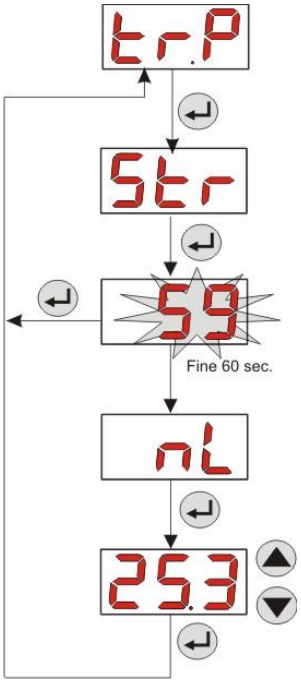

Fig. 11- Pump Calibration Menu

3.3.5 Resetting Default Parameters

From the **r.P.d** entry you will be able to reset the equipment default parameters (refer to the ***Default Parameters Table*** in *ANNEX E*); If you choose to reset the initial values, you will go back to the initial display. See Fig. 12
Once you confirm with **YES**, you cannot go back.

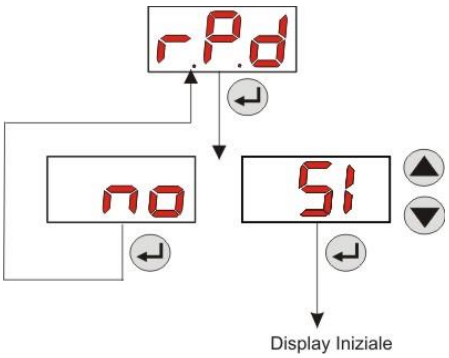

Fig. 12- Default parameter reset

3.3.6 Settings Menu

From the **InP** entry of the Programming Menu, via the **Enter** key, you can access the ***Settings Menu***
From the Settings Menu you can carry out the following operations (refer to **Figure 13**):

- Set the password to access the programming section **PAS**: with **Enter** you can go to the *"000" selection page,* with the ▲ and ▼ keys you can increase/decrease the value displayed and with **Enter** you can scroll to the figure you intend to set. After choosing the new password, press **Enter** for 3 seconds to go back to the **PAS** entry;

- Enable the pump stop in case of a **P.St** level alarm: to enter and exit the submenu, use the **Enter** key, use the ▲ and ▼ keys to choose "*YES/no*";

- Programme the current day of the week **D.CL**: use **Enter** to enter and exit the submenu and use the ▲ and ▼ keys to scroll to the *Sun/Mon/Tue/Wed/Thu/Fry/Sat* values;

- Programme the hours of the current time **H.CL**: to enter and exit the submenu, use **Enter,** to scroll through the values from 0 to 23 hours use the ▲ and ▼ keys;

- Programme the minutes of the current time **n.CL**: to enter and exit the submenu, use **Enter,** to scroll through the values from 0 to 59 seconds use the ▲ and ▼ keys;

- Set the stabilization time of the inhibiting signal, **Stb**, within a range of 0-999 seconds: to enter and exit the submenu, use **Enter**, to scroll through the values use the ▲ and ▼ keys;

- Set the time of the pump maintenance alarm, **O.F.d**, from 0 (disabled) to 999 hours, based on the following format:
  - **h.mm** up to 9 h and 59 m
  - **hh.m** up to 99 h and 59 m (minutes expressed in tens)
  - **hhh** up to 999 h

  To enter and exit the submenu use **Enter** and increase/decrease the value with the ▲ and ▼ keys;

- Access the **In.t** inhibiting signal recognition window: to enter and exit the submenu use **Enter**. The display will show the status identified by the pump for the input signal:
  Steady "HI": enabling signal identified as active;
  Steady "Lo": enabling signal identified as not active;
  Flashing "HI": enabling signal identified as active, but slightly above the identification voltage threshold;
  Flashing "Lo": enabling signal identified as not active, but slightly below the identification voltage threshold;
  If the status displayed does not correspond to the actual status of the signal or if the status displayed is flashing, just scroll with the ▲ and ▼ keys to change the threshold, namely:
  Status of the non-active signal (recirculation pump OFF):
  →if the signal is identified as active (steady or flashing **HI**) or not active but near the threshold (flashing **Lo**), press ▼ to reduce the threshold voltage until a steady "**Lo**" is displayed;
  → if the signal is permanently identified as not active (steady **Lo**), conduct a check when the signal is activated;

  Status of the non-active signal (recirculation pump ON):
  →if the signal is identified as not active (**Lo** steady or flashing), or active but near the threshold(flashing **HI**), press ▲ to increase the threshold voltage until a steady "**HI**" is displayed;
  → if the signal is permanently identified as not active (steady **HI**), conduct a check when the signal is disabled;

- Enable or disable the inhibiting sign **In.E** : to enter and exit the submenu, use the **Enter** key, use the ▲ and ▼ keys to choose "*YES/no*";
  <u>In this model In.E. must be set to "no" because there is no inhibiting input!</u>

- Choose if you want to enable modification of the daily and weekly dosage calendar, **OnL** from the User Menu: to enter and exit the submenu, use the **Enter** key, use the ▲ and ▼ keys to choose "YES/no";

- Set the wait time of the inhibiting signal **tn.A**, that is the time frame, from the scheduled dosage time, within which it is necessary to receive the <u>stabilized</u> input inhibiting signal: to enter and exit the submenu, use the **Enter** key, use the ▲ and ▼ keys to scroll to the values from 0 to 60 minutes;

- Enable the **bu.E** buzzer when an alarm is activated: to enter and exit the submenu, use the **Enter** key, use the ▲ and ▼ keys to choose "*YES/no*";

To go back to the Programming Menu, to the **Opt** entry, just press **Enter** for 3 seconds from any entry of the Menu.

<u>The "Stb", "S.In" and "tn.A" programming will not be effective because there is no inhibiting signal in the Dgtec model! In order to have a device whose operation is influenced by an inhibiting signal, refer to the Simpool Timer *(code ADD81V40100C0000- 1.4 l/h o cod. ADD80030100C0000- 3 l/h)*</u>

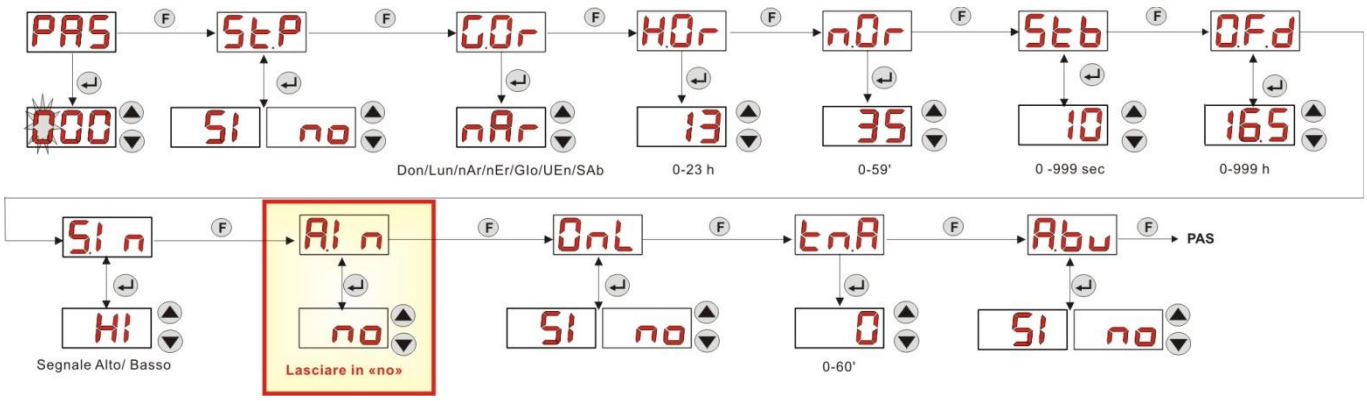

Fig. 13 - Settings Menu

4.0 ALARMS

The entry that reports the active alarm with the top priority is only displayed alternated with the entries of the Initial Menu, while there will be an audio signal (if the buzzer is enabled) and a flashing red LED associated with the status of the Alarm both on the Initial Menu and the User Menu.

4.1 MAINTENANCE ALARM

The maintenance alarm is activated when the pump has been running for longer than the time set in the relative ***O.F.d*** submenu (see *Settings Menu*).

If you set 0.00 (h.mm) as a time value for the maintenance alarm, it will be disabled.

This is reported by the pump as follows:

- Audio signal via the buzzer (if there is one on the pump) if enabled (see ***bu.E*** in the Settings Menu) with a frequency of 1 second on and 1 second off;
- flashing red LED;
- "**OFd**" flashing on the display;

In this alarm status the motor is stationary. To disable the alarm, you need to go to the **P.d.t** entry (pump operating time) in the Statistics Menu and reset the value.

4.2 LEVEL ALARM (only for the model with the level probe)

A level probe can be connected to the pump to report the end of the product, which is indicated by the pump in the following way:

- Audio signal via the buzzer (if there is one on the pump) if enabled (see ***bu.E*** in the "Settings Menu") with a frequency of 1 second on and 1 second off;
- flashing red LED;
- "***uLo***" flashing on the display;

The inlet has a 3-second recognition filter to identify false contacts and unwanted level alarm signals.

This alarm may or may not imply the pump stop, depending on the option chosen in the **"P.St"** submenu (Settings Menu: ***P.St***=YES→ the pump is stopped; ***P.St*** =no → the pump keeps on dosing).

The alarm is automatically reset when the level of the chemical product to be dosed is restored.

In priming mode, the level alarm is not indicated.

4.3 OFF STATUS ALARM

If the switch is left on the OFF position, after 20 minutes the switch alarm is activated and signalled by the pump in the following way:

- Audio signal via the buzzer (if there is one on the pump) if enabled (see ***bu.E*** in the "Settings Menu") with a frequency of 1 second on and 1 second off;
- flashing red LED;
- "**OFF**" flashing on the display;

Just set the switch to ON to disable it.

5.0 MAINTENANCE

This section reports the general rules you need to follow to operate the pump correctly and the steps to carry out periodically to ensure optimal conditions are maintained over time.

5.1 GENERAL RULES

Maintenance operations must be conducted systematically and accurately by following the recommendations reported below to the letter.
It is difficult to define the standard times required for maintenance beforehand, as there are a number of factors that determine the wear of the pump and in particular the parts that are in contact with the liquid.
This also applies to the type of product used to clean the materials that are in contact with it (valves, etc.) as it depends on the compatibility of the material with the chemical product being dosed.
Having said this, we can take as an example a product, such as sodium hypochlorite, that develops crystals, which is often used with our pumps, and with which we have a great deal of experience, and identify the type of maintenance required.

5.2 PERIODIC MAINTENANCE

- Check the foot strainer and clean it periodically from any residuals of crystallised product or dirt deposits;
- Ensure there are no impurities in the suction and delivery tubes, because they may damage the peristaltic tube and, at the same time, cause anomalies in the flow rate;
- **The pump materials that are in contact with the chemical product, such as the foot strainer and the infeed fitting of the tank must be checked and cleaned at least every three months.** If the products are particularly aggressive increase the frequency of cleaning;
- Calibrate the pump periodically;

To remove and reassemble the peristaltic tube refer to the steps described respectively in Figures 14 and 15.

Removing the peristaltic tube

Step 1 - Open the front glass

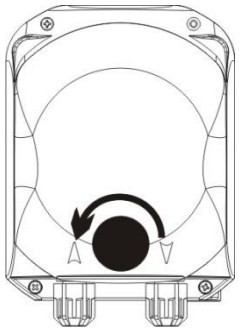

Step 2- Turn the roller clockwise and release the (left) intake ring nut

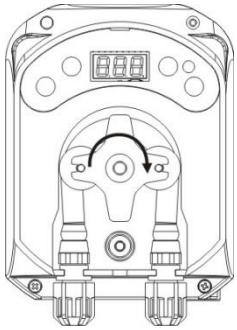

Step 3 - Remove the tube

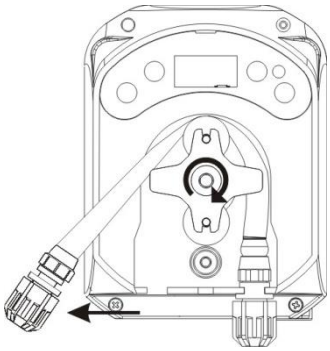

Step 4 - Release the (right) delivery ring nut and remove it completely

Fig. 14 - Removal of the peristaltic tube

Reassembly of the peristaltic tube

Step 1 - Position the tube and secure it on the left-hand side

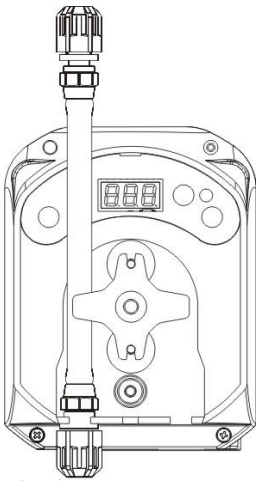

Step 2 - Insert it in the bell by turning the roller

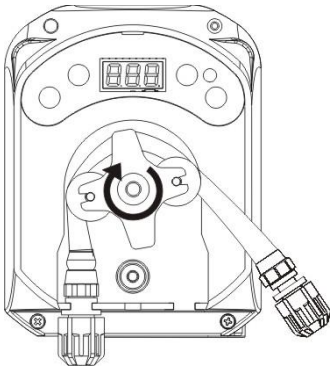

Step 3 - Close the front glass

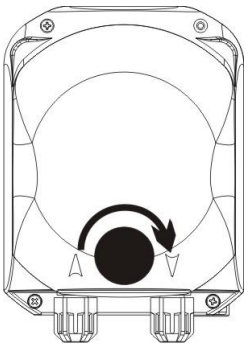

Fig. 15 - Reassembly of the peristaltic tube

5.3 TROUBLESHOOTING

Problem: the pump does not turn on, the LED and display remain off
Solution:

1. Make sure the connection to the electrical network has been set up correctly in accordance with the information provided on the pump identification plate.
2. The electronic board may be damaged as well: call the support Service.

Problem: the pump works well but it doesn't measure out the product into the tank
Solution:

1. Check the product level.
2. Make sure the foot strainer is not clogged up.
3. Make sure the delivery tube is connected to the infeed fitting of the tank correctly;
4. Check the status of the peristaltic tube. If evident malformations are detected, make sure that the material is compatible with the product being dosed by consulting the chemical compatibility table (*see ANNEX D*), and then go ahead with the replacement.

Problem: liquid leaking from the peristaltic tube
Solution:

1. Make sure the delivery and suction tubes are inserted properly and the ring nuts are well tightened.
2. Check the status of the peristaltic tube. If evident malformations are detected, make sure that the material is compatible with the product being dosed by consulting the chemical compatibility table (*see ANNEX D*), and then go ahead with the replacement

Problem: the pump is not reporting an alarm, it has reached the dosing time but it is not dosing
Solution:

1. Make sure the switch is not set to OFF.
2. Make sure the dosing time ***t.d.1-d.8*** has been correctly set (value different from 0');

6.0 Returning material to the After-sales service

The material must be sent back in its packaging with all its original protection devices before the end of the warranty period.
The system must be clean and the chemical product removed from the tubes.
The manufacturer declines any responsibility regarding damages caused by transportation, if the aforementioned conditions are not complied with.

7.0 WARRANTY CERTIFICATE

The manufacturer provides warranty covered for pumps made by them for a period of 12 months, starting from the delivery date to the first user (*).
Within the above terms the producer agrees to provide spare parts for any parts that they, or their authorised representative, believe present factory or material defects free of charge; or to carry out the repair directly or through authorised workshops.
The producer is nevertheless excluded from any other responsibility and obligation regarding other expenses, direct or indirect damage and losses deriving from the use or from the impossibility, either total or partial, to use the pumps.
Any repairs or replacing of parts will neither extend nor renew the duration of the warranty period.
Costs to assemble and disassemble the pump from the system, shipping costs and consumables (filters, valves, etc.) are borne by the user.
The manufacturer's obligations, envisioned in the previous paragraphs, are not valid if:

- *The pumps are not used in compliance with the instructions provided on the operating and maintenance booklet;*
- *The pumps are repaired, dismantled or modified by workshops that have not been authorised by the manufacturer;*
- *Non-original parts have been used;*
- *The injection systems have been damaged by non-compliant products;*
- *The electrical systems break down due to external factors such as surges, any kind of electrical discharges etc.;*

When the warranty period expires, 12 months after delivery of the pump, the manufacturer is relieved of any responsibility and obligations described in the above paragraphs

(*) as attested by the serial code and the invoice issue date

ANNEX A - Overall dimensions

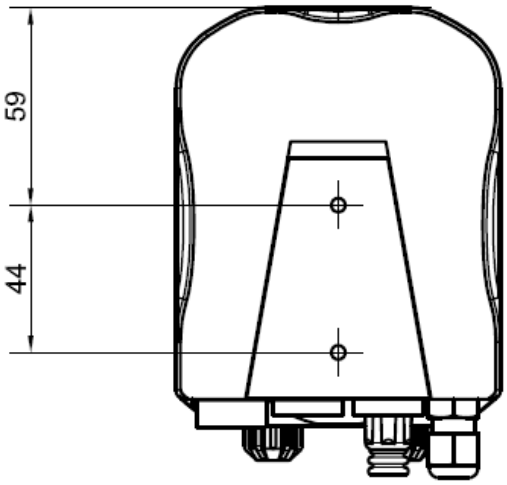

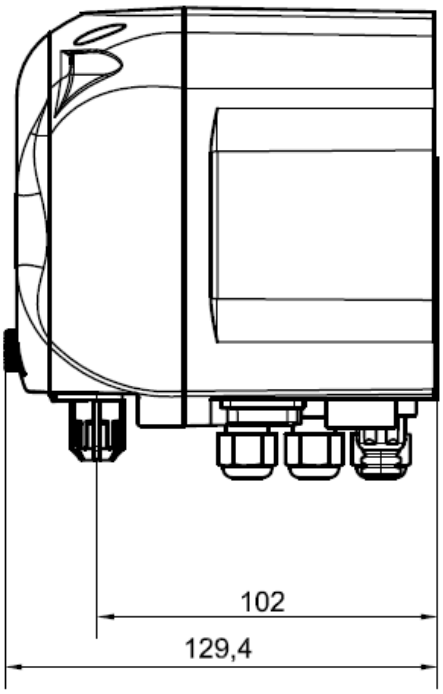

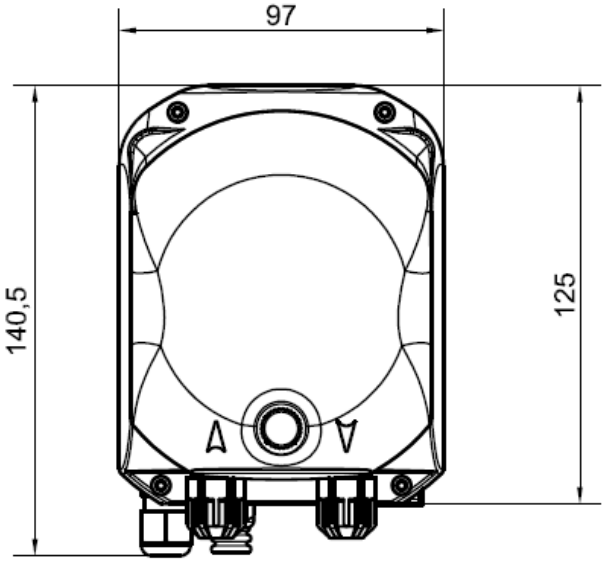

ANNEX B - Reference Figures

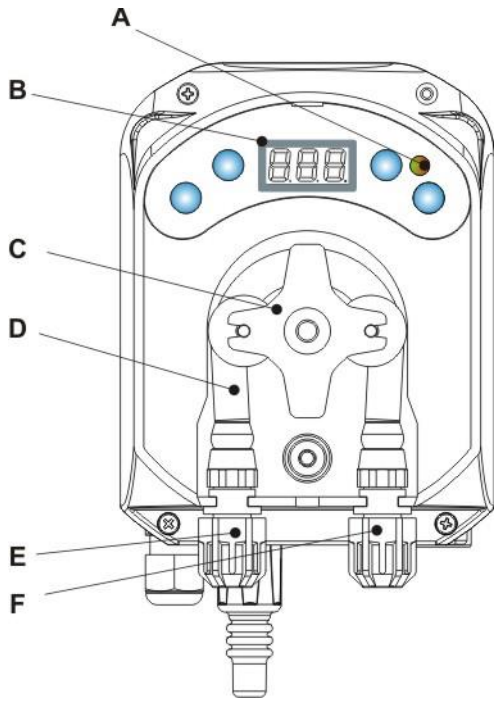

Ref.	Description
A	Two-coloured LED
B	3-digit display with 7 segments
C	Roll-holder
D	Peristaltic tube
E	Intake fitting
F	Delivery fitting

Electronic Board layout

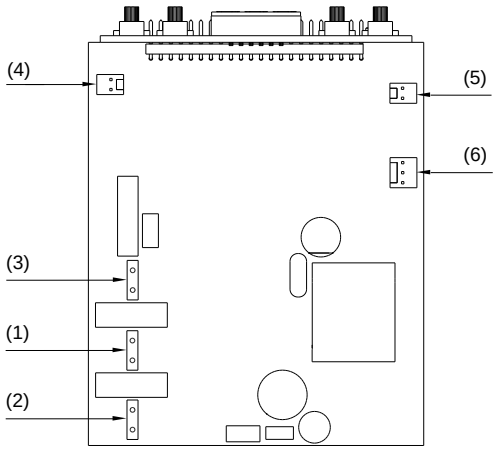

Ref.	Description
1	Equipment Power Supply Connector
2	Inhibiting signal connector ***(not used)***
3	Motor connector
4	Level Connector
5	Buzzer Connector
6	Switch Connector

ANNEX C - Exploded views

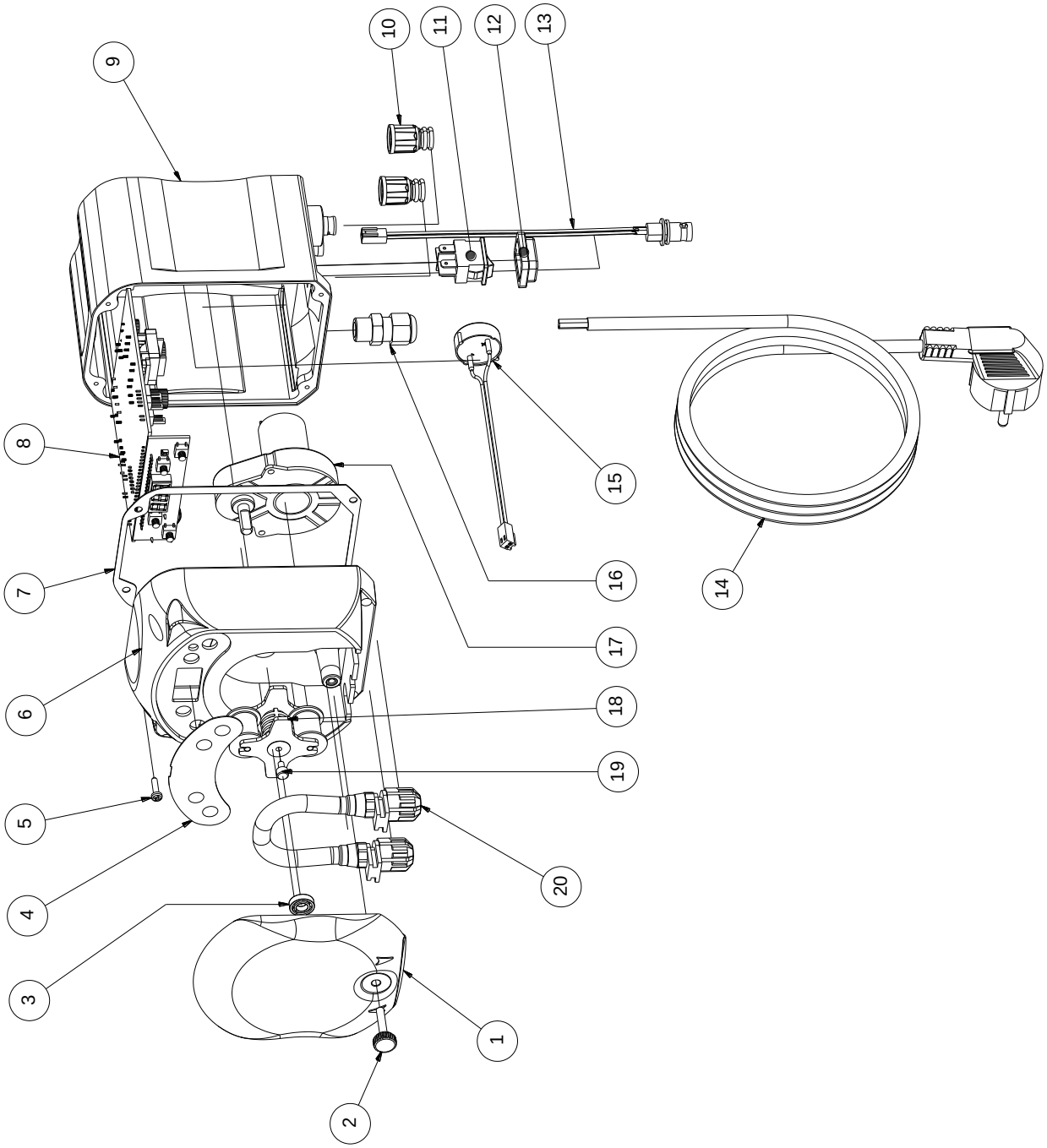

No.	CODE	DESCRIPTION	QTY
1	ADSP8000195	SIMPOOL PERISTALTIC NEUTRAL SMOKED FRONT COVER	1
2	ADSP8000029	KNOB TO SECURE CLEAR TEC COVER	1
3	ADSP4100207	SKF 618/6 BEARING FOR 100L ECOWASH PUMP COVER	1
4	ADSP7000639	DGTEC TIMER– AQUA PERISTALSTIC POLYCARBONATE LABEL	1
5	ADSP6000714	STAINLESS STEEL A2 M 2.9 X 13 SCREW UNI 6954 (slotted pan head)	4
6	ADSP9600005	DGTEC PERISTALTIC FRONT FRAME	1
7	ADSP6000059	PAPER GASKET FOR DIGITAL PERISTALTIC	1
8	ADSP6000990	SIMPOOL/DGTEC SKD TIMER (85-265) Vac	1
9	ADSP9600006	DGTEC PERISTALTIC BACK FRAME	1
10	ADSP6000948	FEMALE BNC PROTECTION FROM BLACK RUBBER PANEL	2
11	ADSP6000685	3A 250V ON/OFF/PAUSE FLIP SWITCH	1
12	ADSP6000686	CLEAR PROTECTIVE COVER FOR ON/OFF SWITCH	1
13	ADSP6000292	CRIMP. CONN.FEMALE BNC CONNECTOR 2.54 L160 R/N CABLED (Level Conn.)	1
14	ADSP6000419	THREE-POLE CABLE 3X0.75 1.5 METRES WITH SCHUKO PLUG - - H05VV-F 3G0.75 -	1
15	ADSP6000627B	2-POLE FREE-HANGING CONN. PIEZO. BUZZER ASSEMBLY P2.54 WIRES AWG24 L=120	1
16	ADSP6000424	PG7 PITCH CABLE GLAND - 1900.07 - B	3
17	ADSP8000078	RPM 20 MOTOR - 230V - (V6084) - Flow rate 3 l/h	1
	ADSP8000041	RPM 9.6 MOTOR - 230V - (V6085) - Flow rate 1.4 l/h	
18	ADSP8000009A	COMPLETE PER-R 4/6-1 ROLLER-HOLDER	1
19	ADSP8000028	PER-R ROLLER-HOLDER GUIDE PIN	1
20	ADSP8000109	COMPLETE PER-R SANTOPRENE TUBE	1

ANNEX D - Chemical Compatibility Table

Key: 1: excellent/good resistance
2: moderate resistance
3: non-resistant

Product	Formula	Ceram.	PVDF	PP	PVC	Hastel.	PTFE	FPM (Viton)	EPDM (Dutral)	NBR	PE
Acetic Acid, Max 75%	CH3COOH	2	1	1	1	1	1	3	1	3	1
Concentrated Hydrochloric Acid	HCl	1	1	1	1	1	1	1	3	3	1
Hydrofluoric Acid, 40%	H2F2	3	1	1	2	2	1	1	3	3	1
Phosphoric Acid, 50%	H3PO4	1	1	1	1	1	1	1	1	3	1
Nitric Acid, 65%	HNO3	1	1	2	3	1	1	1	3	3	2
Sulphuric Acid, 85%	H2SO4	1	1	1	1	1	1	1	3	3	1
Sulphuric Acid, 98.5%	H2SO4	1	1	3	3	1	1	1	3	3	3
Amines	R-NH2	1	2	1	3	1	1	3	2	3	1
Sodium bisulphite	NaHSO3	1	1	1	1	1	1	1	1	1	1
Sodium Carbonate (soda)	Na2CO3	2	1	1	1	1	1	2	1	1	1
Ferric chloride	FeCl3	1	1	1	1	1	1	1	1	1	1
Calcium Hydroxide	Ca(OH)2	1	1	1	1	1	1	1	1	1	1
Sodium Hydroxide (caustic soda)	NAOH	2	1	1	1	1	1	2	1	2	1
Calcium Hypochlorite	Ca(OH)2	1	1	1	1	1	1	1	1	3	1
Sodium Hypochlorite, 12.5%	NAOCl+NaCl	1	1	2	1	1	1	1	1	2	2
Potassium permanganate, 10%	KMnO4	1	1	1	1	1	1	1	1	3	1
Hydrogen Peroxide, 30%	H2O2	1	1	1	1	1	1	1	2	3	1
Aluminium Sulphate	Al2(SO4)3	1	1	1	1	1	1	1	1	1	1
Copper Sulphate	CuSO4	1	1	1	1	1	1	1	1	1	1

Key: 1: excellent/good resistance
2: moderate resistance
3: non-resistant

Product	Formula	PharMed	Tygon LFL	Santoprene
Acetic acid 50%- 60%	CH3COOH	1	1	2
Hydrochloric acid 37%	HCl	1	1	2
Hydrofluoric Acid 40-48%	H2F2	3	2	3
Phosphoric acid	H3PO4	1	1	1
Nitric Acid 68%-71%	HNO3	3	3	3
Sulphuric Acid 30%	H2SO4	1	1	1
Sulphuric Acid 95%-98%	H2SO4	3	3	2
Amines	R-NH2	2	3	1
Sodium sulphates	NaHSO3	1	1	1
Sodium Carbonate (soda)	Na2CO3	1	1	1
Ferric chloride 43%	FeCl3	1	1	1
Calcium Hydroxide	Ca(OH)2	1	1	1
Sodium Hydroxide (caustic soda) 30-40%	NAOH	1	2	1
Calcium Hypochlorite 20%	Ca(OH)2	1	1	1
Sodium Hypochlorite, 12.2%	NAOCl+NaCl	1	1	1
Potassium permanganate, 6%	KMnO4	1	1	1
Hydrogen Peroxide, 30%	H2O2	1	1	1
Aluminium Sulphate 50%	Al2(SO4)3	1	1	1
Copper Sulphate 13%	CuSO4	1	1	1

ANNEX E - Default Parameters

Default Parameters Table

IT parameter	EN parameter	Meaning	Value
A.bu	bu.E	Buzzer Enabling	YES
A.In	In.E	Inhibiting Signal enabling	no
H.d.1- d.8	H.d.1- d.8	Dosing time 1-8	0
LIn	LAn	Language	En
n.d.1-d.8	n.d.1-d.8	Dosing minutes 1-8	0
O.F.d	O.F.d	Maintenance Time	0 sec (disabled)
OnL	OnL	Online Modification	YES
PAS	PAS	Password	000
Stb	Stb	Stabilization Time	10 sec
St.P	P.St	Pump Stop (due to Level Alarm)	no (disabled)
t.d.1- d.8	t.d.1- d.8	Dosing time 1-8	0
tn.A	tn.A	Inhibiting Signal Wait time	0

ANNEX F- Acronyms Table

IT acronym	En acronym	Meaning
A.bu	b.En	Buzzer Enabling
A.In	In.E	Inhibiting Signal Enabling
AdE	PrI	Priming
C.do	do.C	Dosing calendar
dAY	dAY	Day of the week
Err	Err	Error
G.Or	d.CL	Clock Day of the week
H.d.1-8	H.d.1-8	Dosing time no. 1-8
HI /LO	HI /LO	High / Low (Inhibiting Signal Level)
H.Or	H.CL	Current time hour
InP	OPt	Settings
LIn	LAn	Language
n.d.1-8	n.d.1-8	Dosing time minutes n°1-8
nL	nL	ml
n.Or	n.CL	Current time minutes
O.F.d	O.F.d	Maintenance Time
OnL	OnL	On-line Temperature
orA	tIn	Time
PAS	PAS	Password
rSt	rSt	Reset
SI / no	YES / no	SI/ NO
S.In	In.t	Inhibiting Signal Threshold
StA	StA	Statistics
Stb	Stb	Stabilization Time
St.d	d.St	Dosing Status
St.P	P.St	Pump Stop (due to Level Alarm)
Str	Str	Pump Calibration Start
t.d.1-8	t.d.1-8	Dosing time no. 1-8
t.F.P	P.d.t	Pump Operating Time
tn.A	tn.A	Inhibiting Signal Wait time
tr.P	P.CA	Pump Calibration

ANNEX G - Menu Layouts

Initial Menu

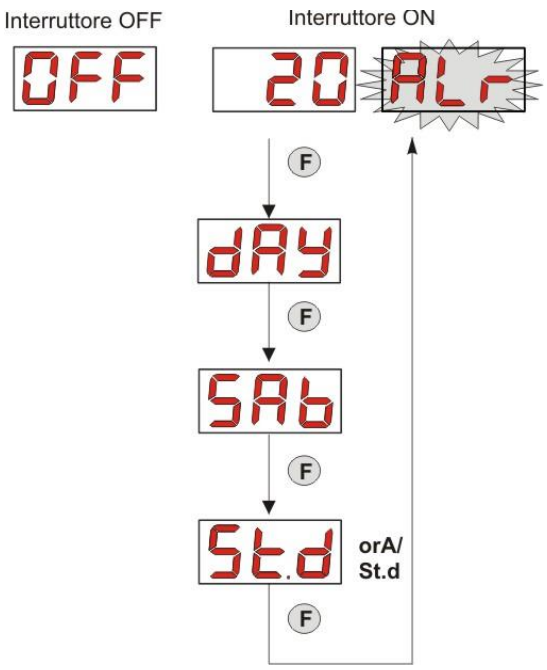

User Menu

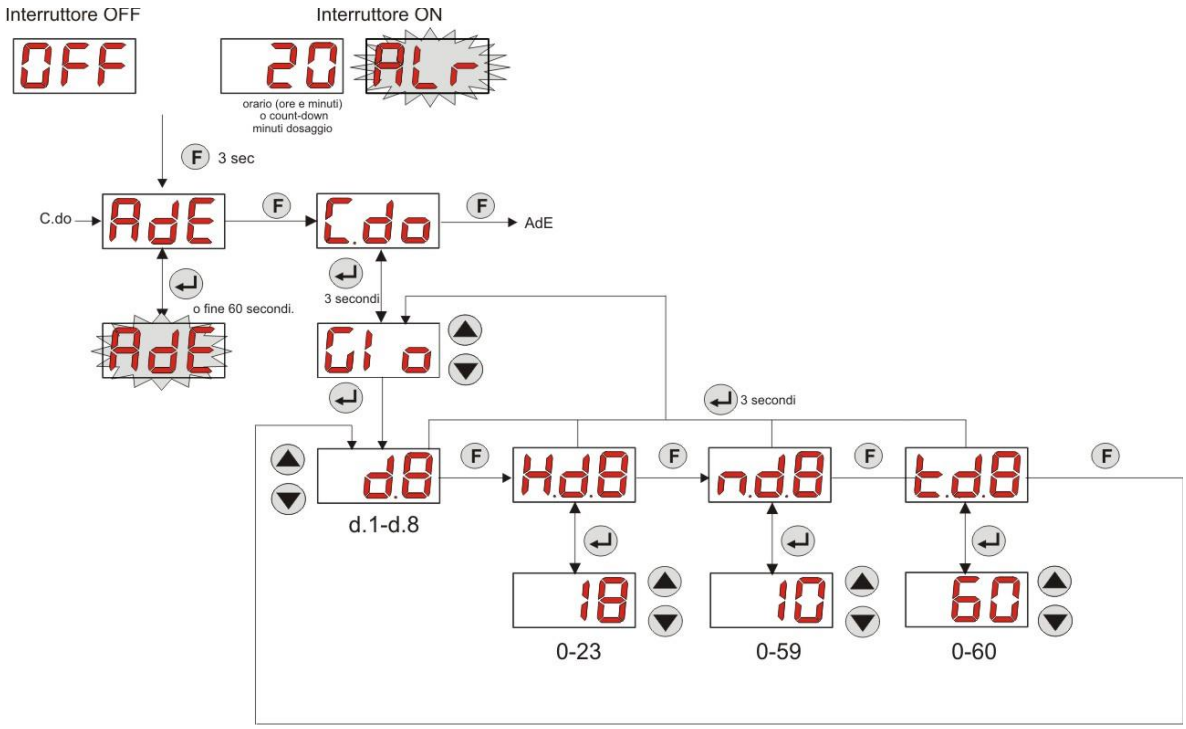

Programming Menu

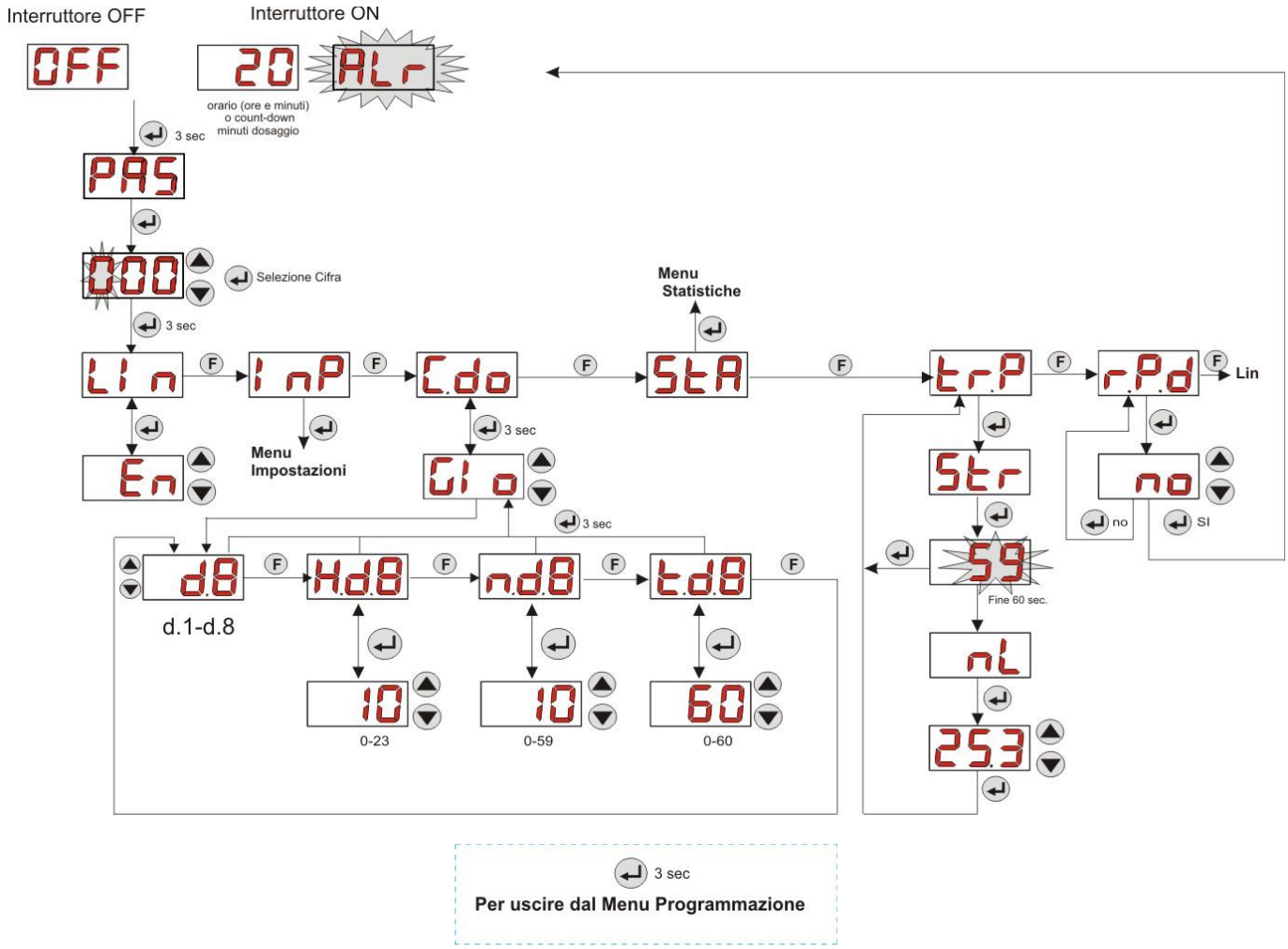

Statistics Menu

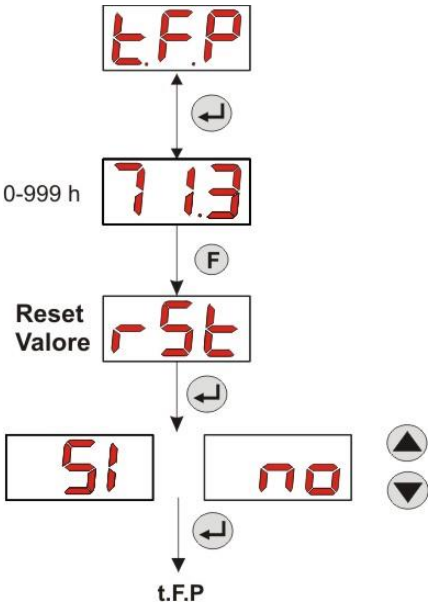

Settings Menu

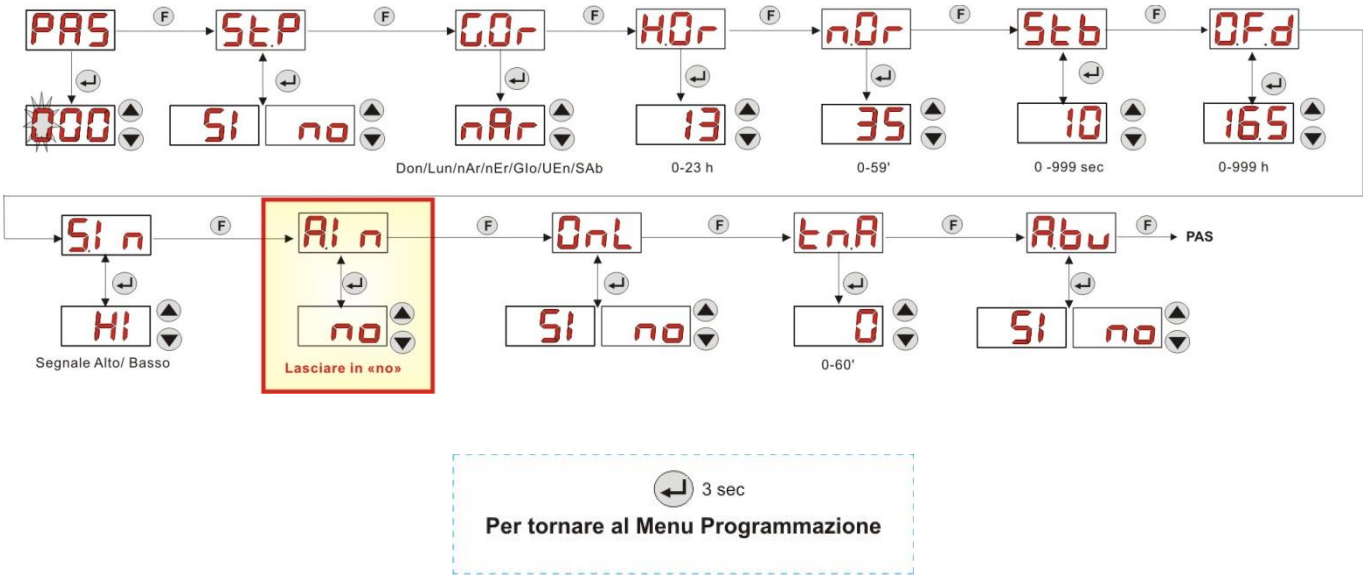

3 sec

Per tornare al Menu Programmazione

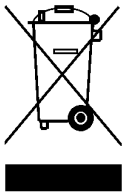

Pursuant to art. 13 of Italian Leg. Decree no. 151 dated 25/07/2005 (implementation of Directives 2011/65/EU , 2002/96/EC, 2003/108/EC) it is notified that:
The electric and electronic devices must not be considered as household waste.
Consumers must, by law, return the electric and electronic devices at the end of their useful life to adequate recycling centres. The crossed-out waste bin symbol on the product, on the instruction manual or on the packaging indicates that the product is subject to the disposal rules envisioned by the Standard. The illegal disposal of the products implies the application of the administrative fines provided for by Italian Leg. Decree no. 151 dated 25/07/2005. Recycling and reusing materials and obsolete devices is a contribution to environmental protection

DGTEC TIMER